In Common With

Calla Sconce

Technical Specifications
sales@incommonwith.com
+1 (917) 830-8700
incommonwith.com

Calla Sconce, Small

Technical Specifications	Materials	Glass, brass
	Product weight	5 lbs
	Lead time	12 weeks
	Bulbs inlcuded (1)	G9 / 120 V / 4.5 W / 450 lm 2700 K / dimmable
	Dimmer	TRIAC
	Max wattage	10 W
	Certifications	cULus listed, cETLus listed, damp-rated DAMP

Notes

1. This fixture has handmade elements and may exhibit variability within the same piece. These variations are inherent in the production process and are not to beconsidered as defects. We do our best to maintain a consistent product while honoring handmade craftsmanship.
2. Dimensions may vary within one inch.
3. This fixture has a mud ring for a trimless installation over a standard junction box. Please note a professional drywall finisher will be required. See installation instructions for details.

Updated	February 5, 2026

Calla Sconce, Small

Technical Drawings

Front View

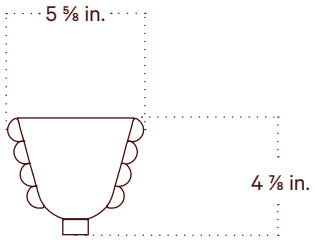

Side View

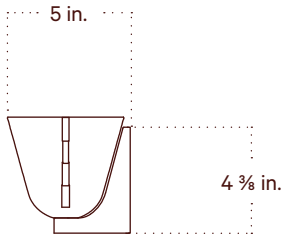

Top View

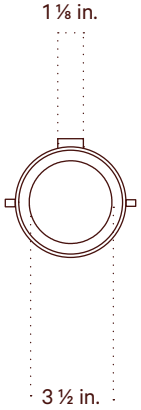

Isometric View

Calla Sconce, Small with Backplate

Technical Specifications	Materials	Glass, brass
	Product weight	5 lbs
	Lead time	12 weeks
	Bulbs inlcuded (1)	G9 / 120 V / 4.5 W / 450 lm 2700 K / dimmable
	Dimmer	TRIAC
	Max wattage	10 W
	Certifications	cULus listed, cETLus listed, damp-rated DAMP
Notes	1. This fixture has handmade elements and may exhibit variability within the same piece. These variations are inherent in the production process and are not to beconsidered as defects. We do our best to maintain a consistent product while honoring handmade craftsmanship. 2. Dimensions may vary within one inch.	
Updated	February 5, 2026	

Calla Sconce, Small with Backplate

Technical Drawings

Front View

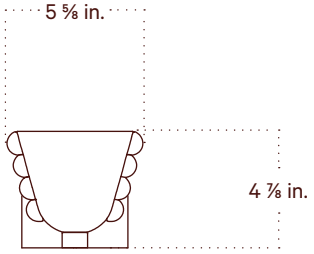

Side View

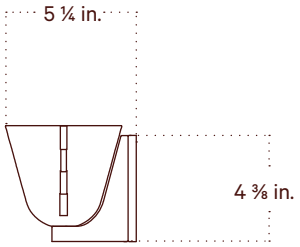

Top View

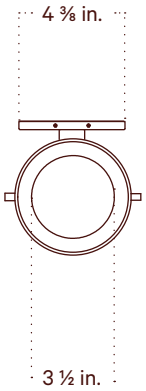

Isometric View

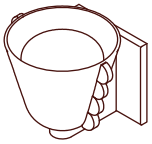

Calla Sconce, Medium

Technical Specifications	Materials	Glass, brass
	Product weight	16 lbs
	Lead time	12 weeks
	Bulbs inlcuded (1)	G9 / 120 V / 7.0 W / 700 lm 2700 K / dimmable
	Dimmer	TRIAC
	Max wattage	10 W
	Certifications	cULus listed, cETLus listed, damp-rated DAMP
Notes	1. This fixture has handmade elements and may exhibit variability within the same piece. These variations are inherent in the production process and are not to beconsidered as defects. We do our best to maintain a consistent product while honoring handmade craftsmanship. 2. Dimensions may vary within one inch.	
Updated	February 5, 2026	

Calla Sconce, Medium

Technical Drawings

Front View

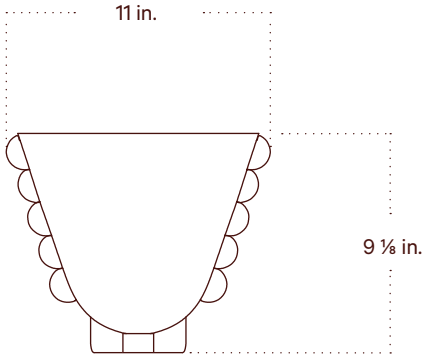

Side View

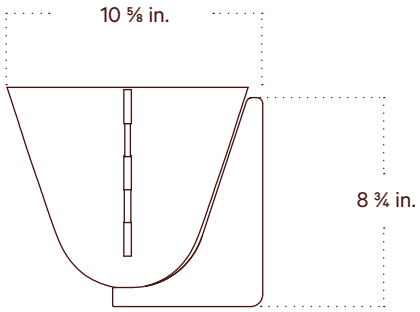

Top View

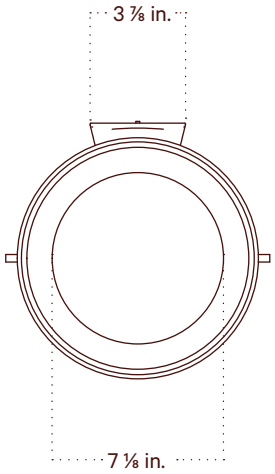

Isometric View

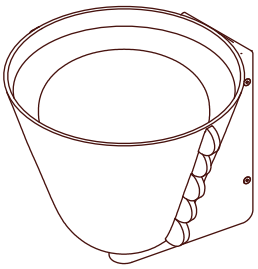

Finish Options

Brass, glass, and ceramic samples made or finished by hand may exhibit variability. Available for purchase at incommonwith.com/finishes.

Hand-blown Glass

Opaline
Opaline Embellishments

Opaline
Pistachio Embellishments

Opaline
Amber Embellishments

Pistachio
Pistachio Embellishments

Lilac
Amber Embellishments

Lilac
Poppy Embellishments

Lilac
Pistachio Embellishments

Tobacco
Pistachio Embellishments

Tobacco
Ink Embellishments

Poppy
Poppy Embellishments

Poppy
Ink Embellishments

Brass

Brass

Patina Brass

Blackened Brass

Pewter